Cold Frame Single™

Protect your crops from pests and frost

104 L x 53 W x 43 H cm
41″ L x 21″ W x 17″ H

10 MINUTES ASSEMBLY AND YOUR GARDEN-BED IS COVERED

Protect and extend your growing season to early spring and late autumn

- High impact, crystal clear lid - maximum light transmission
- Unbreakable polycarbonate sides panels
- Rust resistant aluminum frame
- Hinged lid for easy access & ventilation
- Promotional item – full colored, compact, light weight packaging

Cold Frame Single™ *Protect your crops from pests and frost*

Closed
Frosts & pests protection

Open
Ventilation & humidity control

Without lid
Irrigation & cultivation

4 matching
spikes included

Pick & Go item

- Full colored packaging
- Compact light weight packaging
- Quick & easy assembly
- All included kit – with 4 matching spikes

Long lasting & durable

- Rust resistant aluminum frame
- No glass shatter or break
- UV protected

4 Professional tips for using your Cold Frame

- **Know your area climate**
  It is important to plan your vegetables and plant varieties according to your local environment.
- **Stretch the calendar**
  Light soil warms up faster than heavier soil.
  Warm the soil by adding organic matter to heavy soil in order to lighten it.
- **Beat the heat**
  Summer has an intense heat that dries out the plants.
  In order to avoid this, cool the soil with a mulch of compost straw or other organic materials on sunken beds to retain the moisture. Another way is to provide shade.
- **Fight frost**
  In short seasons with frost the simplest thing is to provide coverings for the plants to keep them warm.
  Just remember to remove the covering on hot sunny days to prevent the plants from over heating and drying out.

Cold Frame Single Dimensions	Item Number	Package Dimensions	Pallet Quantity
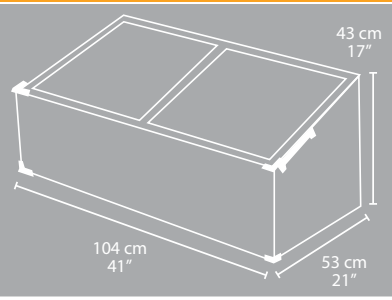	**701148**	**1 Carton** 104 x 56 x 6cm 41″ x 22″ x 2.3″	76 Units
	Barcodes	**Package Gross Weight**	**40′ HC Container**
	EAN-13 - 7290010027774 **UPC-A** - 894275000854	2.9 kg / 6.5 lbs	1,672 Units

Approx. dimensions. Unless a different definition is written, all products dimensions are the product's maximal dimensions.

PALRAM Applications Ltd
Tel: (972) 4 848 6900 **Fax:** (972) 4 848 6901
E-mail: marketing@palram.com
www.palramapplications.com

Manufactured and marketed by:
PALRAM Applications Ltd. is a member of PALRAM Ind.

UV PROTECTED

68529